CHAPLIN
INFORMATION SHEET

STANDARD HEIGHT CLAMP ON

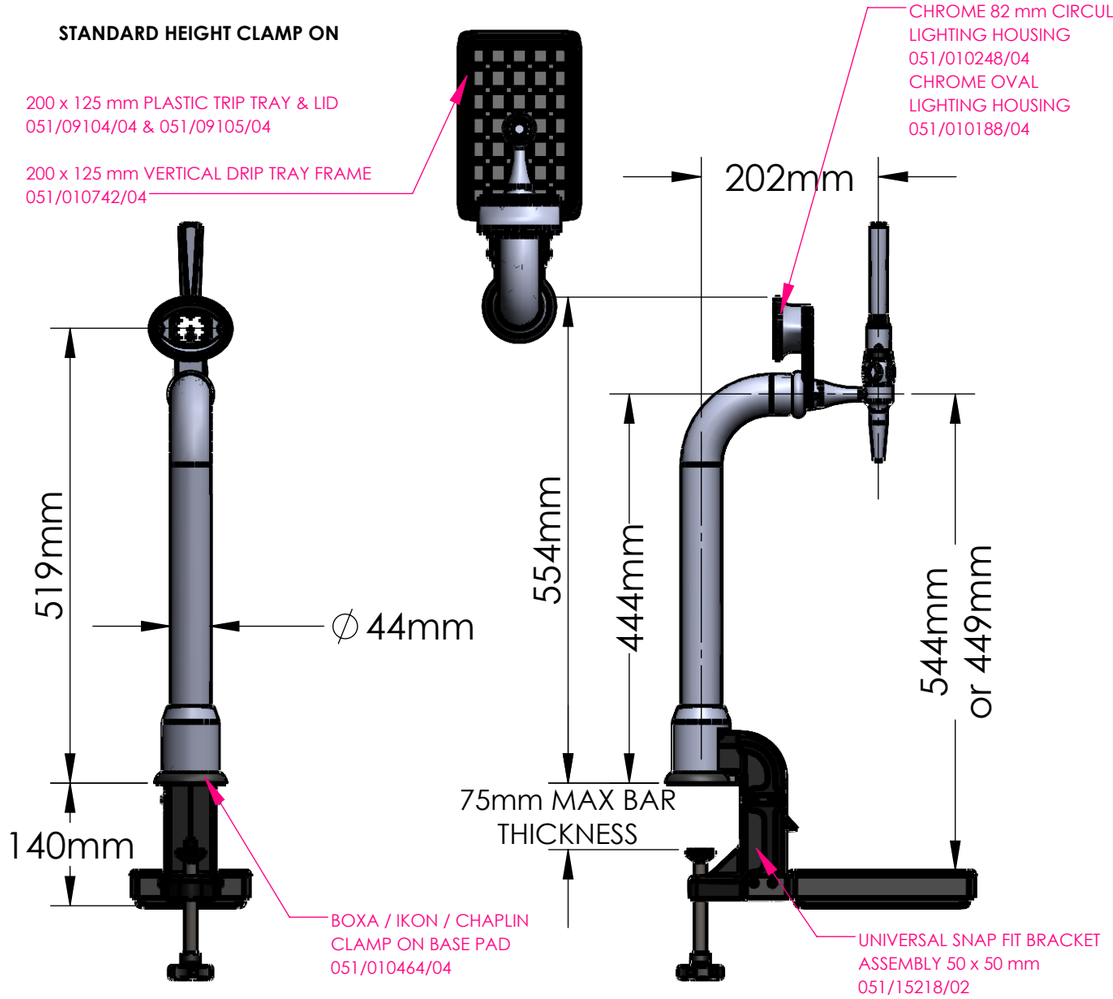

STANDARD HEIGHT THROUGH BAR

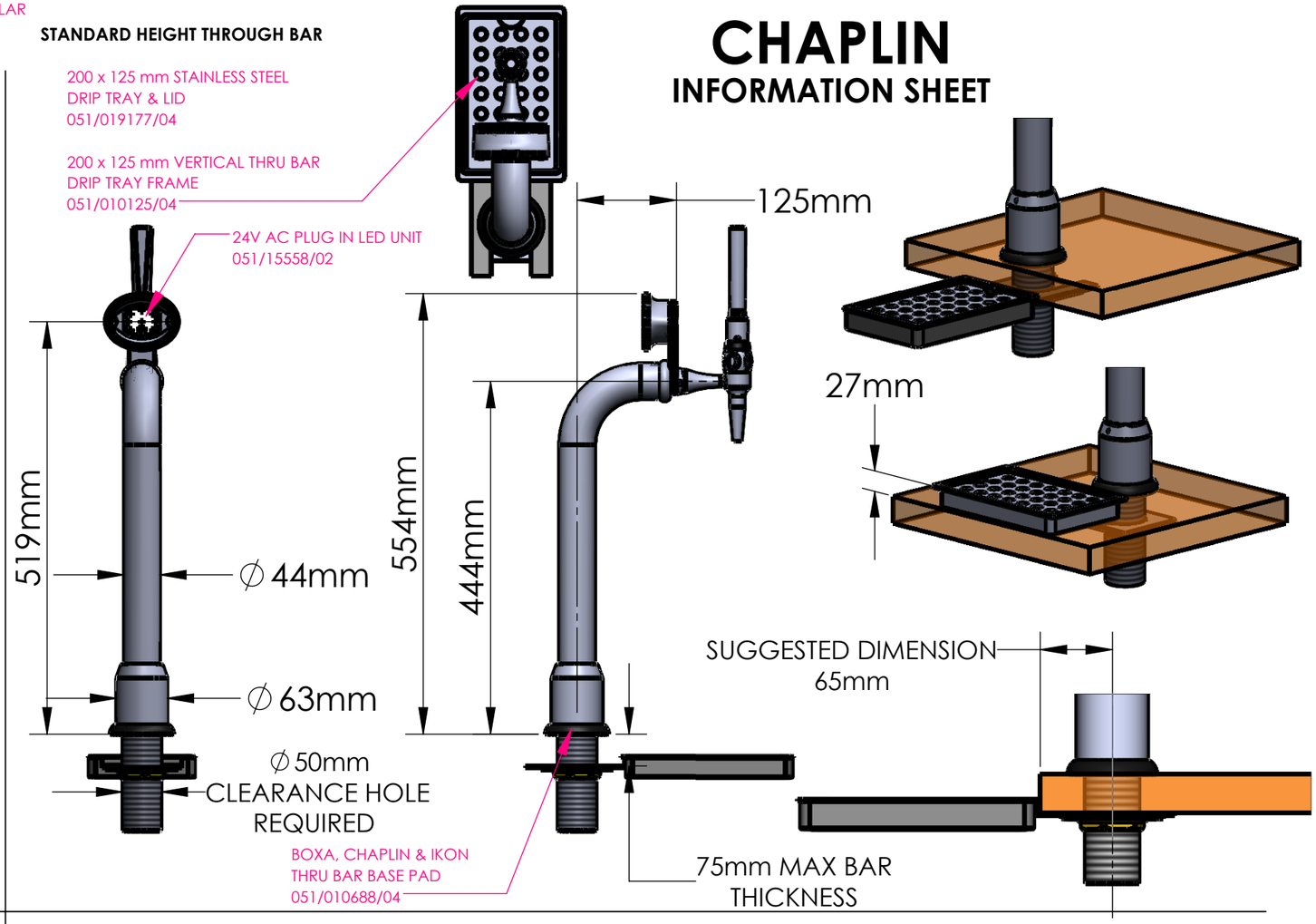

LOWCHAPLIN CLAMP ON

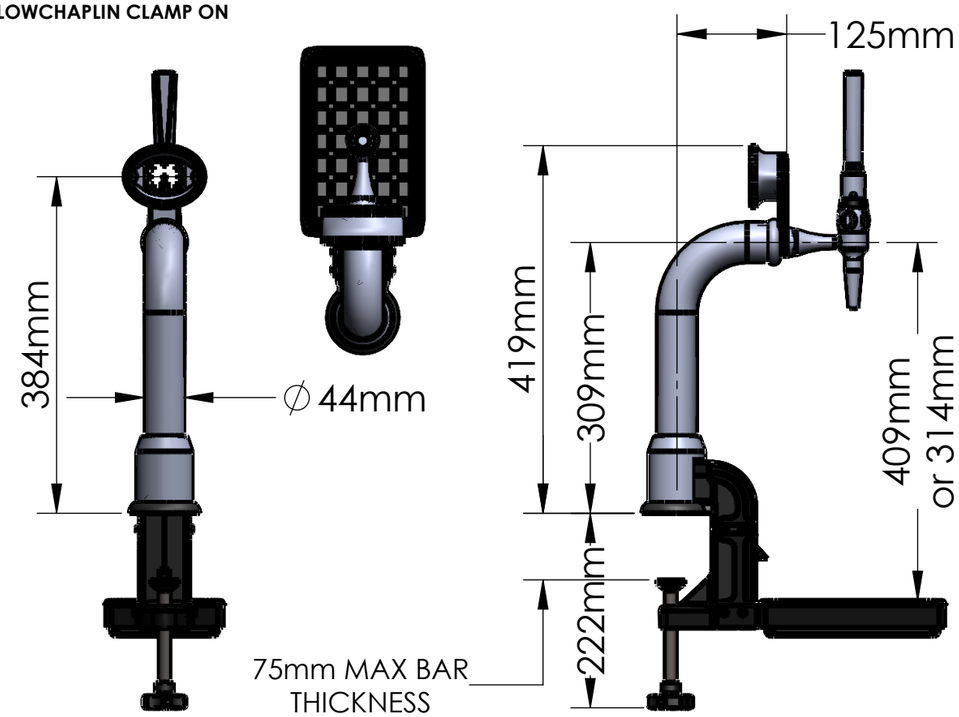

LOWCHAPLIN THROUGH BAR

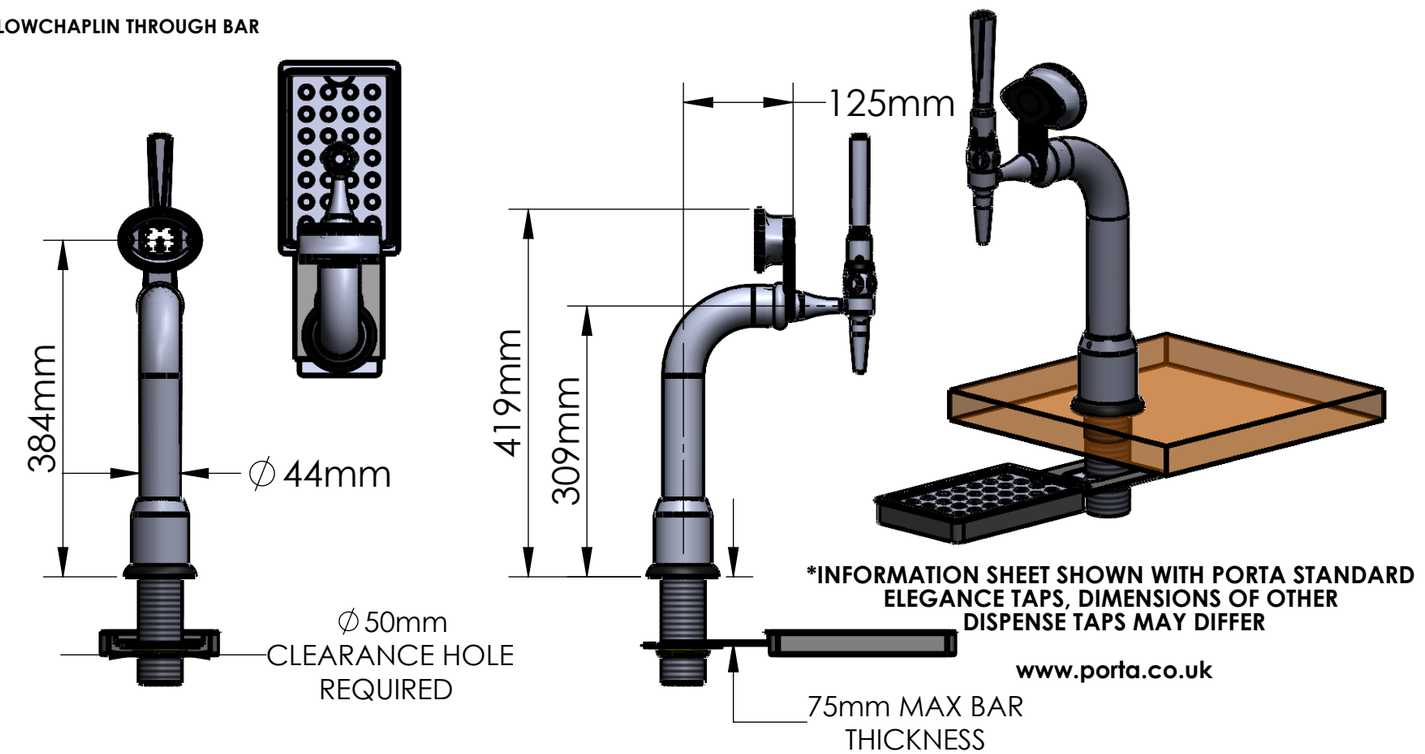

***INFORMATION SHEET SHOWN WITH PORTA STANDARD ELEGANCE TAPS, DIMENSIONS OF OTHER DISPENSE TAPS MAY DIFFER**

www.porta.co.uk